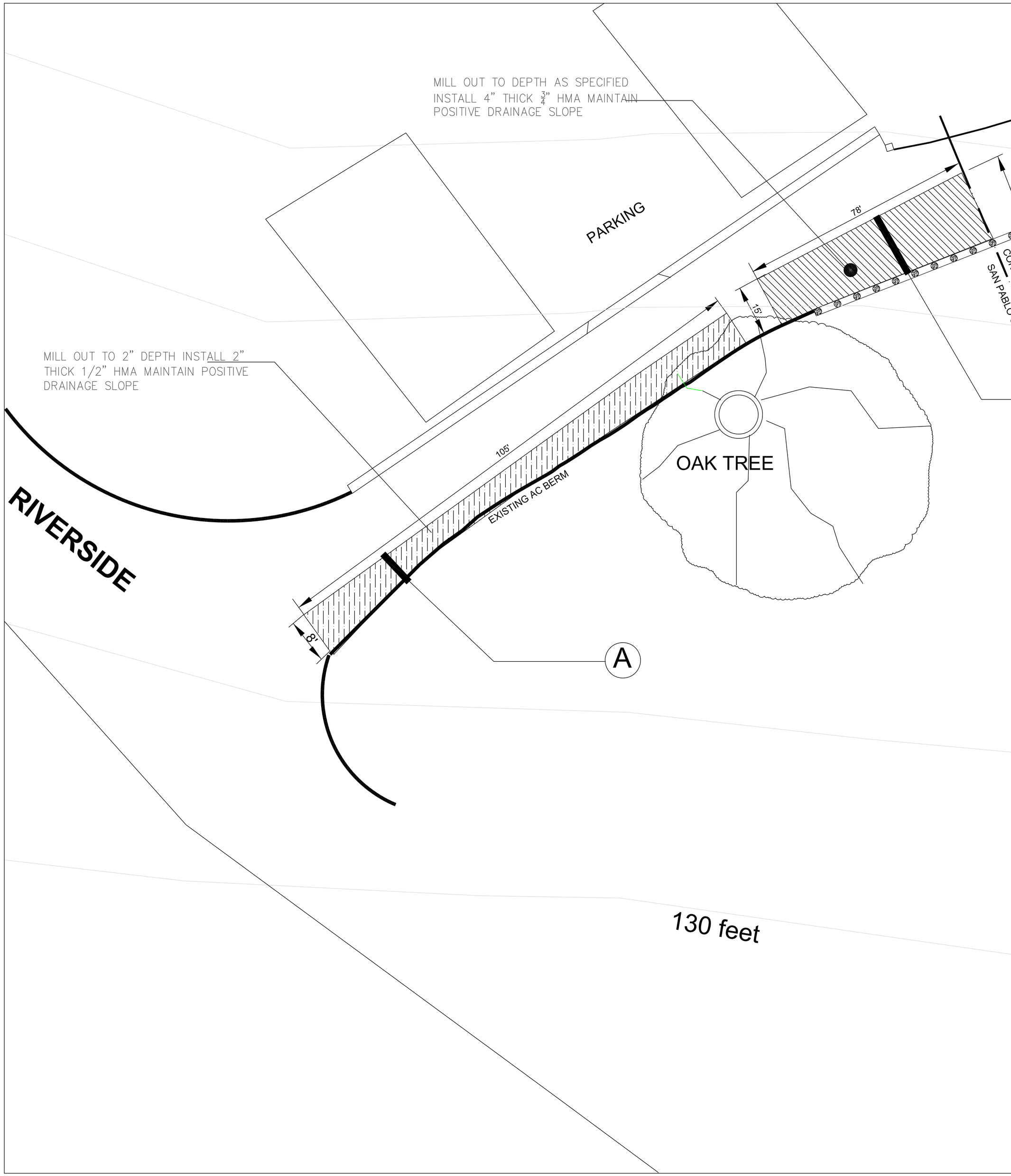

NOTE:
DIGOUT BASE REPAIR TO BE MARKED BY CONTRACTOR
AND CITY REPRESENTATIVE ASSUME PAVEMENT
FABRIC UNDER STREET SURFACES

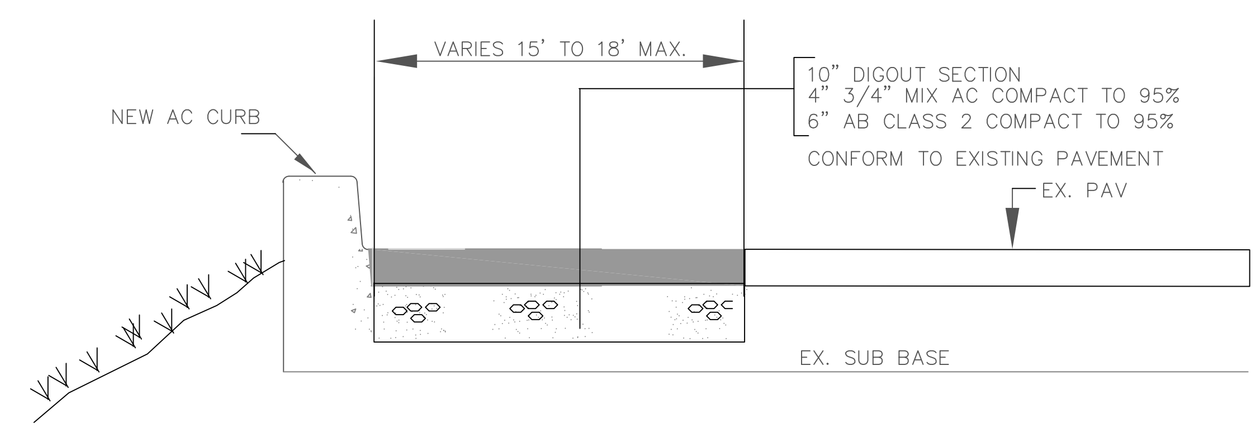

B DIGOUT PAVEMENT SECTION
scale: N.T.S

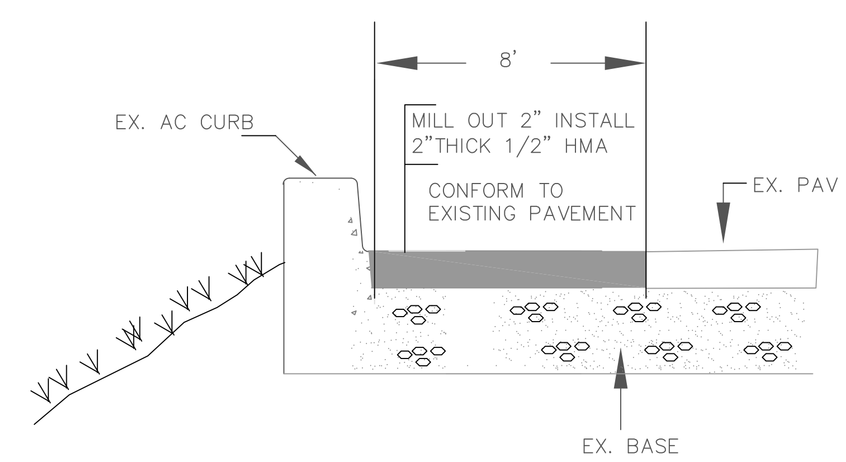

A SECTION
scale: N.T.S

REGISTERED PROFESSIONAL ENGINEER
BARBARA HAWKINS
No. C 00000
Exp. 06-30-09
CIVIL
STATE OF CALIFORNIA

Barbara Hawkins, City Engineer
R.C.E. No.58985 EXPIRES 06/30/17
SAN PABLO, CALIFORNIA

Revisions			
Description	Mark	Date	By

13831 SAN PABLO AVE
SAN PABLO, CA 94806
T 510-215-0360
F 510-215-3031
www.sanpabloca.gov

CITY OF SAN PABLO
ENGINEERING DIVISION

FILENAME

PAVEMENT SECTION REPAIR PLAN

ROADWAY STABILIZATION
NORTH ARLINGTON BOULEVARD

Designed LS
Drawn LS
Checked BW

Project No. JOB#
Date: DATE

SHEET
5